USB PD and Other Fast Charging Protocol Chip CH236

Datasheet

Version: 1E

http://wch.cn

1. Overview

CH236 is a Type-C fast charging protocol chip, supports PD2.0/3.0, PPS, BC1.2 and other fast charging protocols, supports AC-DC or DC-DC constant-voltage and constant-current output mode feedback adjustment, with features of high integration and simplified peripherals. It integrates functions of VBUS detection and discharge, and provides over-voltage, over-temperature and over-current protection. CH236 can be widely used in various occasions such as AC power adapter, car charger, UPS and power bank.

2. Function Features

- Support 3.3V-24V wide voltage input. Voltage adjustable in 20mV.
- Support multiple fast charging protocols such as PD2.0/3.0, PPS and BC1.2.
- Support USB Type-C PD and supports forward and reverse plug detection and automatic switch
- Support AC-DC and DC-DC constant-voltage or constant-current power management.
- High integration, simplified peripherals and low cost
- Cable voltage drop compensation: 100mV/A
- Built-in overcurrent protection, over temperature protection, overvoltage protection and under voltage protection

3. Applications

- AC power adaptor
- On-board charger
- UPS
- Power bank

4. Package

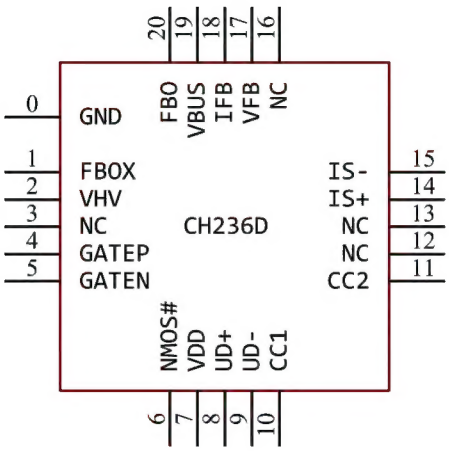

Figure 4.1 CH236D (QFN20_3*3) pins arrangement

5. Pins

Pin No.	Pin Name	Pin Type	Pin Description
2	VHV	HV power	High-voltage positive power supply, connects an external 1uF decoupling capacitor
0	GND	Power	Ground
4	GATEP	Output	Used to control VBUS power output
5	GATEN	Output	Used to control VBUS power output
7	VDD	Operating power	Internal power regulator LDO output, connects an external 1uF decoupling capacitor
8	UD+	Bidirectional Tri-status USB bidirectional	USB D+ data line
9	UD-		USB D- data line
10	CC1	Bidirectional Tri-status Analog bidirectional	Type-C CC1 data line
11	CC2		Type-C CC2 data line
14	IS+	Differential amplifier Analog input	Positive input of current detection module
15	IS-		Negative input of current detection module
17	VFB	Analog input	Feedback port of constant-voltage loop
18	IFB	Analog input	Feedback port of constant-current loop
19	VBUS	High voltage Analog input	VBUS discharge port, supports high voltage
20	FBO	High voltage Analog output	Power management feedback
1	FBOX	High-voltage analog input	Power management feedback
6	NMOS#	Configuration input	NMOS output enable
3，12，13，16	NC	NC	Reserved

6. Description of Pins Function

6.1. Overview

CH236 supports PD3.0/2.0/PPS, BC1.2 and other fast charging protocols, supports AC-DC and DC-DC, constant voltage loop and constant current loop, integrates VBUS detection and discharge functions, supports cable voltage drop compensation, and provides functions such as over-voltage, over-temperature and over-current protection.

6.2. VHV Pin and FBO Pin

The VHV pin of CH236 is the high-voltage power input pin of the chip, which should be connected to the output of AC-DC or DC-DC converter. The FBO pin is the output pin of the power management, which should be connected to the feedback of AC-DC or DC-DC converter. CH236 adjusts the output voltage of AC-DC or DC-DC converter through the FBO pin. When CH236 is powered on, the output voltage is 5V by default. CH236 will automatically adjust the output voltage of AC-DC or DC-DC converter according to the protocol communication.

6.3. GATEN/GATEP Pins

The GATEN/GATEP pins are used to drive MOS and control VBUS power output. When device is not connected, MOS will be switched off. When the device is connected, MOS will be switched on. When

device removal/overvoltage protection/over temperature protection/overcurrent protection is detected, CH236 will switch off the MOS, and stop supplying power to the device, and restore the VHV voltage to the default voltage of 5V. CH236 can drive NMOS or PMOS. When using GATEN to drive NMOS, the NMOS# pin should be connected to GND. When GATEP is used to drive PMOS, the NMOS# pin should be disconnected.

6.4. CC1/CC2 Pins

CC1/CC2 pins are used for device attachment detection, PD protocol communication. CH236 supports DFP mode with 500mA, 1.5A and 3A current advertising. If the device is connected, CH236 will enter the PD mode to communicate with the device. If the PD declared current is greater than 3A, E-Mark communication will be performed firstly when the device is connected. When the E-Mark handshake is successful and the declared current of the cable is more than 3A, the Source Capability message will support more than 3A. Otherwise, the Source Capability message will not exceed 3A.

6.5. UD+/UD- Pins

The UD+/UD- pins are used for the BC1.2 fast charge protocol communication.

6.6. VBUS Pins

The VBUS pin is used to sense the VBUS voltage, should be connected to the VHV. If CH236 detects that the VBUS voltage exceeds the safe voltage, the VBUS discharge function will be switched on until the VBUS voltage is within the safe voltage.

6.7. Loop Control Circuit (VFB, IFB, IS+, IS-, FBO)

CH236 supports AC-DC and DC-DC constant voltage loop and constant current loop. The FBO pin controls the output current of the optocoupler, the VFB and IFB pins are used for constant voltage feedback and constant current feedback loop, and the IS+/IS- pins are used for output current detection.

6.7.1. Constant Voltage Compensation Circuit of AC-DC Topology

The entire compensation circuit is composed of power stage output sampling circuit, differential operational amplifier circuit of constant voltage loop and FBO pin control circuit. The VFB pin should be connected to FBO pin with a loop compensation capacitor, refer to figure 8.1.

6.7.2. Constant Current Compensation Circuit of AC-DC Topology

CH236 supports constant current mode output. The loop compensation will be implemented by the compensation circuit between the IFB, IS+, IS- and FBO pins. The IFB pin should be connected to FBO pin with a loop compensation capacitor, refer to figure 8.1. The constant current output stability can be adjusted through the capacitor between IFB and FBO.

6.7.3. Constant Voltage and Constant Current Design of DC-DC Topology

CH236 supports DC-DC topology, refer to figure8.2. As FBO direction is single, it can only sink current, it is necessary to add a triode to the FBO output port to reverse. In addition, the DC-DC default output voltage is configured to be a voltage slightly higher than the maximum output voltage of VBUS by more than 2V. The constant current compensation loop is in the same design as the AC-DC topology.

7. Protection Function

7.1. Overvoltage Protection

CH236 detects the voltage on the VHV pin to realize the overvoltage protection function. The overvoltage protection voltage is 120% of the constant voltage loop setting. According to the negotiation of the fast charging protocol, the threshold voltage will automatically changes, but it is always 120% of the set value. When overvoltage protection occurs, MOS will be switched off, CH236 will enter the discharge mode. Until all the fault signals disappear, CH236 will re-detect device access.

7.2 Over temperature Protection

Over temperature protection occurs when the temperature reaches about 138℃. When over temperature protection occurs, the MOS will be switched off, CH236 will enter the discharge mode. Until all the fault signals disappear, CH236 will re-detect device access.

7.3. Overcurrent Protection

When CH236 detects that output current exceeds the threshold current, overcurrent protection will occur, and the threshold current will be 120% of the set value. When overcurrent protection occurs, the MOS will be switched off, CH236 will enter the discharge state. Until all the fault signals disappear, CH236 will re-detect device access.

7.4 Under voltage Protection

When CH236 detects that the voltage on the VHV pin is lower than 2.4V, under voltage protection will occur. When under voltage protection occurs, the MOS will be switched off and then CH236 will enter the reset standby state. Until all the fault signals disappear, CH236 will re-detect device access.

7.5. Cable voltage drop compensation Function

CH236 has cable voltage drop compensation function: 100mV/A.

8. Application Reference

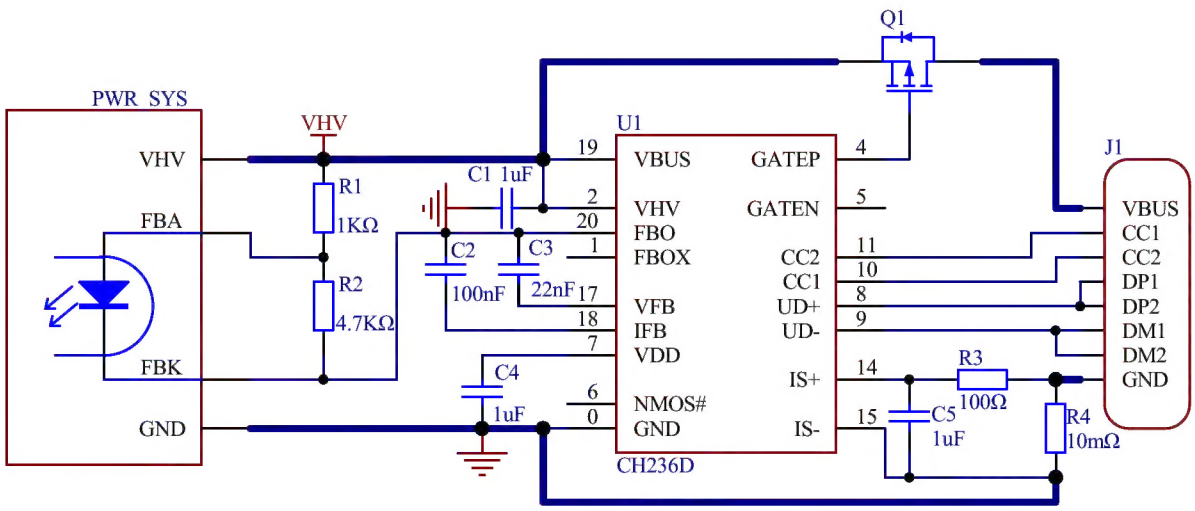

Figure 8.1 Reference circuit that CH236 uses GATEP pin to drive PMOS with AC-DC power

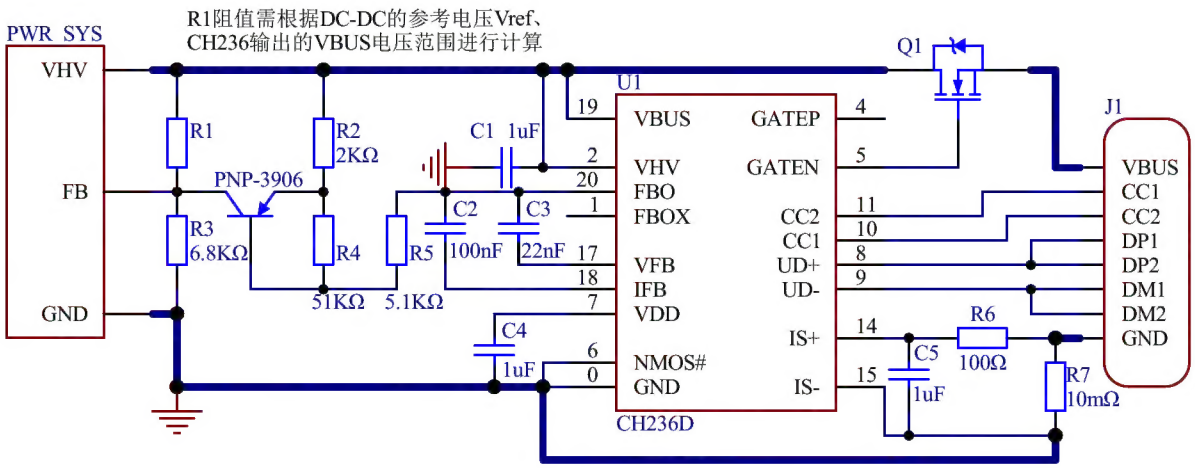

Figure 8.2 Reference circuit that CH236 uses GATEN pin to drive NMOS with DC-DC power

When CH236 works with DC-DC power, the default output voltage of DC-DC should be configured as the maximum output voltage of VBUS +2V, for example, the VBUS output voltage ranges from 5V to 12V, the default output voltage should be configured as 14V, at this time, R1=14/Vref*6.8K-6.8K.

When Vref=1.25V and VBUS outputs up to 20V, R1=110K.

When Vref=1.25V and VBUS outputs up to 12V, R1=68K.

9. Notes for PCB Layout

The decoupling capacitor of VHV/VDD pin shall be placed close to the chip.

To sample current, it is recommended to choose Kelvin Four-terminal sensing to reduce error. IS+ and IS- pins should be directly connected to the sampled resistor in series with RC filter circuit.

10. Parameters

10.1. Absolute Maximum Ratings

Critical value or exceeding the absolute maximum value may cause the chip to work abnormally or even be damaged.

Name	Parameter description	Min.	Max.	Unit
TA	Ambient temperature during operation (VHV<16V)	-40	110	℃
TA	Ambient temperature during operation (VHV>=16V)	-40	100	℃
TS	Ambient temperature during storage	-55	125	℃
VDD	Operating supply voltage (VDD connects to power, GND to ground)	-0.5	6.0	V
VHV	High-voltage supply voltage (VHV connects to power, GND to ground)	-0.5	25.0	V
VIO	Voltage on UD+, UD-, CC1, CC2, IS+ and IS- pins	-0.5	VDD+0.5	V
VIOHV	Voltage on the GATEN, GATEP, VBUS and FBO pins	-0.5	25	V
PD	Maximum power consumption of the entire chip (VHV voltage * current +VBUS discharge power consumption)	-0.5	300	mW
VIOCC	Voltage on CC1 and CC2 pins	-0.5	20	V
ESD	Human body model (HBM)		2	KV

10.2 Recommended Operating Conditions

Name	Parameter description	Min.	Max.	Unit
VHV	Voltage on VHV pin	5	22	V
VIOHV	Voltage on FBO,VBUS pins	0	22	V
VIOUD	Voltage on CC1, CC2, UD+,UD- pins	0	VDD	V

10.3. Electrical Parameters

(Test Conditions: TA=25℃)

Name	Parameter description	Min.	Typ.	Max.	Unit
VIL	TTL low level input voltage	0		1.3	V
VIH	TTL high level input voltage	2.4		VDD	V
VIX	Schmitt TTL input flip voltage (rated voltage difference is 0.3V)	1.6		2.2	V
VOL	Low level output voltage (15mA peak draw current)		0.35	0.5	V
VOH	High level output voltage (8mA peak output current)	VDD-0.5	VDD-0.35		V
OTC	Over-temperature protection		138±15		℃

11. Package Information

Package	Width of plastic	Pitch of pin		Ordering information
QFN20	3*3mm	0.40mm	15.7mil	CH236D

Note: All dimensions are in millimeters.

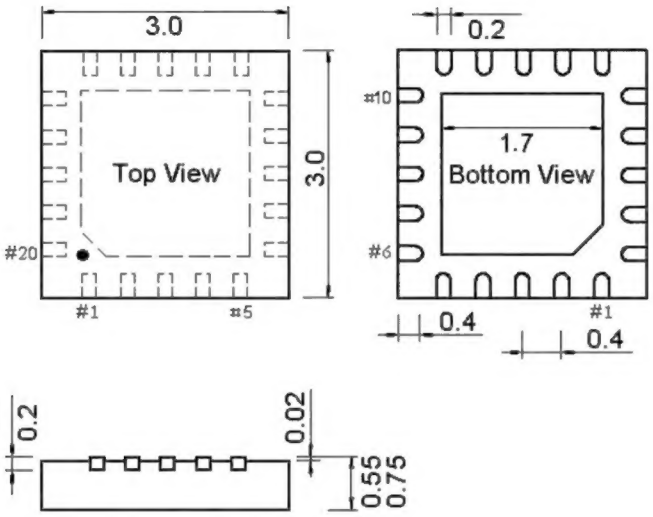

12. Ordering Information

	CH236	D	1	A	-XXX
Chip model					
Chip package	**D**:QFN20 3*3mm				
Output voltage tap position	See the attached table for the definition of configuration code				
Power configuration	**A**:AO pin drive				
Customized model code	None: Standard type XXX: Customized model code				

Ordering Code and Output Voltage Tap Position

Configuration code	Output voltage configuration						
	PDO 1	PDO 2	PDO 3	PDO 4	PDO 5	PDO 6	PDO 7
1	5V@3A	9V@2A	12V@1.5A			3.3~5.9V@3A	3.3~11V@2A
2	5V@3A	9V@2A				3.3~5.9V@3A	3.3~11V@2A
3	5V@3A	9V@3A	12V@2.25A			3.3~5.9V@3A	3.3~11V@2A
4	5V@2.4A			14.5@2A			
5	5V@3A	9V@3A	12V@2.5A			3.3~12V@2.5A	
6	5V@3A	9V@3A	12V@2.5A	15V@2A	20V@1.5A	3.3~12V@2.5A	
7	5V@3A	9V@3A	12V@3A	15V@3A			
8	5V@3A	9V@3A	12V@3A	15V@3A	20V@3A		
9	5V@3A	9V@3A	12V@3A	15V@3A	20V@3A/3.25A	5~11V@3A	5~20V@3A
A	5V@3A	9V@3A		15V@2A	20V@1.5A		
B	5V@3A	9V@3A	12V@3A	15V@3A	20V@1.5A	3.3~12V@2.5A	
C	5V@3A	9V@2.22A	12V@1.67A			3.3~5.9V@3A	3.3~11V@2A
D	5V@3A	9V@2.22A					
E	5V@3A	9V@2.22A	12V@1.67A				
Other	Customized						